Elite 500

Modbus / BACnet / Profinet / IEC61850 protocol

Best in class accuracy | Graphical display | Support Rogowski coil | Hot pluggable communication modules

High-precision, multiple communication, TFT display

The Elite 500 series includes devices with advanced power monitoring capabilities, which can be used for standalone device monitoring and power quality analysis as part of BMS, process industrial controls and SCADA systems.

They also offer data logging, control IOs and modular communication with multiple protocols for third party system integration.

Based on the application, Elite 500 allows customers to select conventional type CT or Rogowski coil input, which can be directly connected to the meter without the need for any additional integrator.

Applications

- Energy transfer measurement and reconciliation
- Power plants, feeder monitoring, grid substations, wind turbines, renewables, industrial and commercial premises
- Online monitoring of energy exchange at various interface points
- Automation and system integration
- Process and factory automation
- Retrofit application up to 4000A can be served by using Rogowski coil along with Modbus / BACnet / Profinet / IEC 61850 protocol support, Analogue output and control IOs
- Oil and gas / Mining / Hospitals / Malls / Datacentres
- LV / MV / HV Switchgear

Benefits

- Minimal integration cost through hot pluggable modular options for multiple communication ports
- Support of multiple industry standard protocols: MODBUS RTU / TCP, Profinet, BACnet and IEC 61850 for integration with SCADA and other automation systems
- Field replaceable hot pluggable communication, PIPO, alarm and analogue output modules
- Supports measurements for Energy Efficiency / LEED certification
- Large, high-resolution graphical colour display for analytical and graphical views
- Options to have conventional ring type CT or Rogowski coil

Features

- 17 energy measurements support including net and absolute energy parameters
- Class 0.2S / 0.5S accuracy for active and reactive measurement
- TFT display showing vector diagram, bar chart, weekly / monthly energy consumption comparison
- Configurable favourite parameter on display page
- Time synchronisation options through SNTP
- Power quality features including individual harmonics, THD, sag, swell, voltage unbalance and interruption counter
- Total demand distortion (TDD) factors and waveform quality indices like K factor and crest factor
- Positive, negative and zero sequence components
- Flexible time-of-day tariff, maximum demand / demand support, DST (daylight saving time)
- Supports PIPO / DIDO, alarm and analogue output module
- Alerts and events on configured parameters
- Dual loggers for instantaneous and energy parameters
- Dual socket support on Ethernet TCP IP module allows for simultaneous communication over Modbus.
- Supports RS485 Modbus along with any chosen Ethernet protocol

CEWE INSTRUMENT
a **Secure** brand

Elite 500

Industrial and commercial application (Modbus TCP)

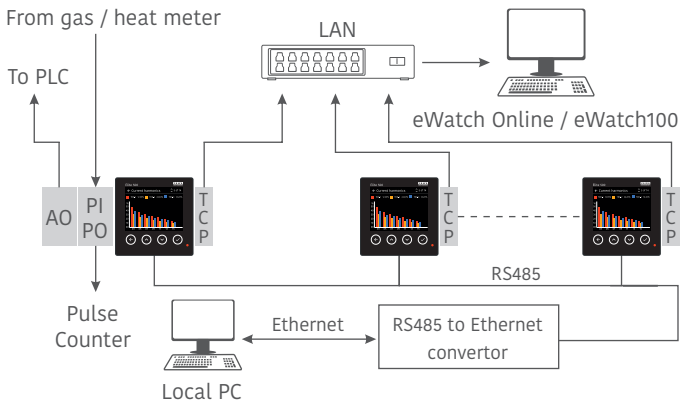

PROFINET network architecture

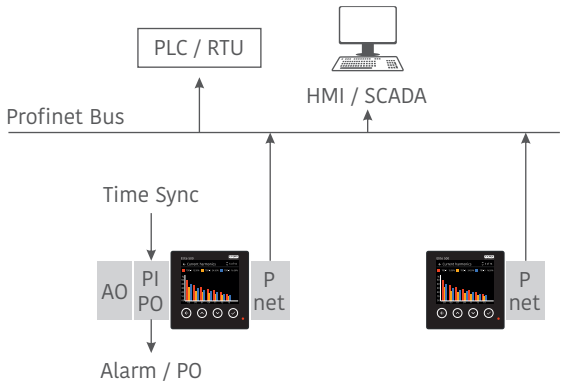

BACnet network architecture

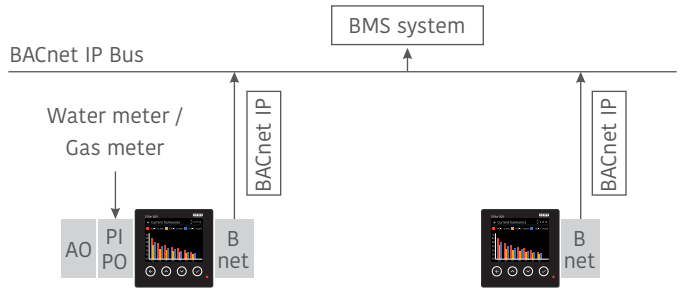

IEC61850 network architecture

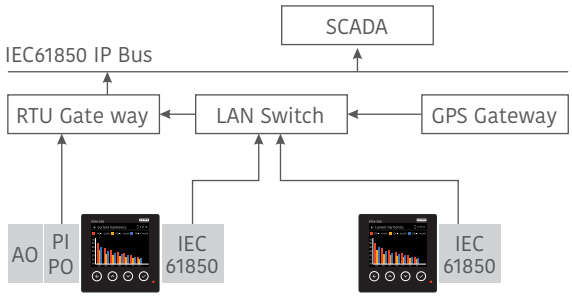

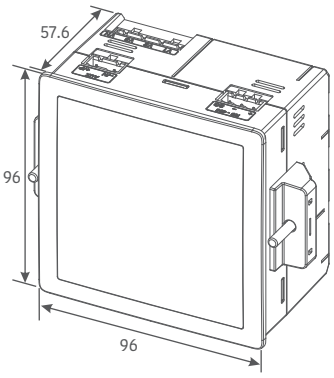

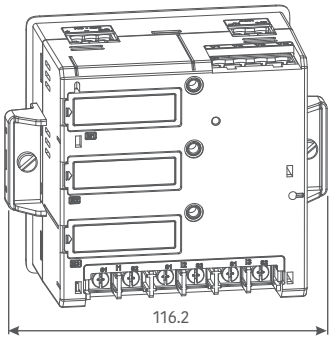

Mounting clamp to mounting clamp

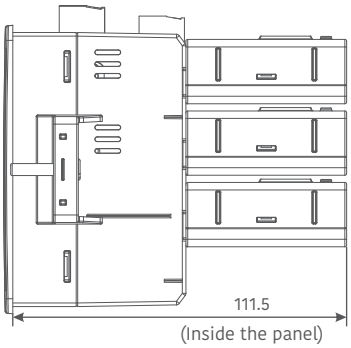

(Inside the panel)

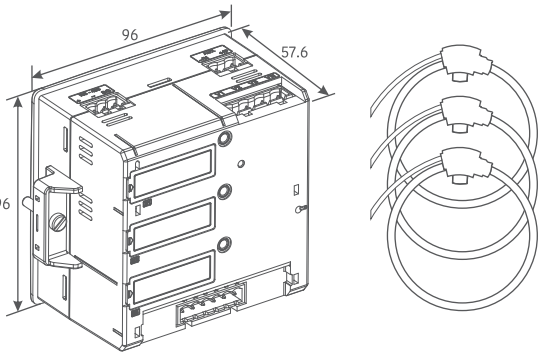

Integrated solution (product with Rogowski)

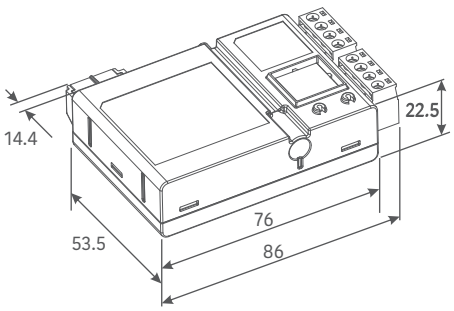

pluggable modules (optional)

Technical specifications

	Conventional	Rogowski
Electrical		
Connection type	LV 3P4W / HV 3P4W / 1CT 3PT / LV 3CT / HV 3P3W / 3CT 2PT / 2CT 2PT / 1P 2W	
Measurement voltage range	35 V to 500 V (L-L) max, 20 V to 300 V (L-N) max	
Measurement current range	10mA - 6 A (configurable)	5% I_{pr} -I_{pr} (I_{pr}-1000 A or 4000 A)
Starting current range	1mA	1 A for 1000 A / 4 A for 4000 A
Frequency	50 / 60 Hz	
Burden	Current circuit: < 0.2 VA/phase @ 1A & @ 5A Voltage circuit: < 0.2 VA/phase	
Sampling rate	156 samples / cycle / channel	
Accuracy		
Energy	Class 0.2S / class 0.5S	Class 0.5S
Voltage, Current, Power	0.2% for measurement range	
Frequency	±0.05 Hz	
Power factor	±0.005 (0.5 lag to 0.5 lead)	
Maximum withstand Voltage	2 times of nominal voltage value for 1 Sec repeated 10 times at 10 second interval	
Maximum withstand current	1.2 times of Ib continuously	-
Short time over current	20 times I_{max} for 1 second	-
Overload (continuous)	1.5 times of Ib (Up to 7.5A) (only measurement)	-
Standards	IEC 62052-11, IEC 62053-22, IEC 62053-24, IEC61557-12, IEC 62053-31, IEC 60529, IEC 61010-1, IEC 61010-2-030, IEC 61326-1, IS14697, CE, UKCA IEC 61850-6, 7-1, 7-2, 7-3, 7-4, 8-1, (as per edition 1 and 2)	
Environmental		
Ingress protection	IP 54 (front fascia); IP20 (at terminals), IP 65 with gasket (Optional)	
Insulation	3.5 kV RMS 50 Hz, 1 minute	
Impulse withstand	6.4 kV	
Operating temperature	-10°C to + 60°C	
Storage temperature	-25°C to + 70°C	
Temperature coefficient	0.1% / °C	
Mechanical dimension	96 x 96 x 57.6 mm (± 0.5 mm) (H x W x D)	
Weight	365 g	
Software	- Two data loggers: Primary data logger Logging of up to 20 energy channels values, with integration period 5, 15, 30 & 60 minutes ~15000 parameter-days capacity at 30-minute interval Secondary data logger Logging of up to 20 instantaneous values with integration period 1, 2, 5, 10, 15 & 30 minutes ~35000 parameter-days capacity at 30-minute interval - Configurable parameters: • 8 time-of-use tariffs (TOU), 8 Seasons, 8 day types, DST dates, 6 billing history • Logging daily energy snapshots values up to 90 days • Alarms and event logging Up to 31st individual harmonic component measurement UP to 63rd total harmonic distortion (THD) measurement K-factor, Crest Factor, TDD, sequence components Power quality features including voltage sag, swell	

Elite 500

Technical specifications

Features	
Power supply	Range: 48-300VDC or 85-300VAC
Burden	Base product: <3W, < 6.5VA at 240V AC. With all modules: <6.5W, <16VA
Display	TFT for graphical and analytics (3.5 inch)
	Size: 53 x 70 mm (H x W), 320x240 pixels. Pixel size: 0.22 mm^2
Battery	Battery for RTC backup
Inputs and Outputs	1 relay output, 1 fixed pulse output, 2 configurable pulse inputs / outputs • Pulse outputs: Type: volt-free, 100 mA, voltage: 48-240 V AC / DC, Option for 24-40 V DC, pulse width: 20 - 300 ms (for 50Hz); 16 - 300 ms (for 60Hz) • Configurable as pulse input / output: Pulse output type: volt-free, 100mA pulse input type: Optical isolator, Voltage: 24-240 V AC / DC • Relay output: Type: volt-free, 2A • Analogue output (self-powered) 4 configurable AO 0-20mA, 4-20mA • Indicator 2 LEDs: 1 for metrology (red), 1 for alarms / events (amber)
Communication	
RS485 port	Protocol: Modbus RTU Baud rate: 1200 – 38400 bps, parity- none, even, odd
Ethernet port	Ethernet over RJ-45, 10 / 100 Mbit / s, SNTP time sync Optional Modbus TCP / IP, Modbus Gateway, BACnet IP, ProfiNET, IEC61850
Software support	Configview (for configuration / reading), Optional eWatch 100 / eWatch Online

Order codification

Conventional Current input		Rogowski Current input	
Elite500	E500	**Elite500**	E500
Current Input		**Current Input**	
Conventional	C	Rogowski	R
Accuracy		**Accuracy**	
Class 0.2S	2	Class 0.5S	5
Class 0.5S	5		
PQ parameters		**PQ parameters**	
Ind harmonics up to 15th order	1	Ind harmonics up to 15th order	1
Ind harmonics up to 15th order, PQ parameters*	2	Ind harmonics up to 15th order, PQ parameters*	2
Ind harmonics up to 31st order	3	Ind harmonics up to 31st order	3
Ind harmonics up to 31st order, PQ parameters*	4	Ind harmonics up to 31st order, PQ parameters*	4
		Rogowski Input	
Fix digit	0	3x(1000A, 70 mm)	C
For Secure	2	3x(1000A, 140mm)	D
e.g. model number: **E500C-2102**		3x(4000A, 140mm)	E
		3x(4000A, 200mm)	F
		For Secure	2
		e.g. model number: **E500R-51C2**	

*PQ Parameters – sag, swell, interruption, TDD, K factor, crest factor, TEHD, TOHD, positive, negative and zero sequence components.

Specifications are subject to change without prior notice

Australia
sales_australia@securemeters.com
www.securemeters.com/au

Europe
sales_europe@securemeters.com
www.securemeters.com/eu

India, SE Asia, Africa
sales_india@securemeters.com
www.securemeters.com/in

UAE
sales_middleeast@securemeters.com
www.securemeters.com/me

UK
sales_uk@securemeters.com
www.securemeters.com/uk

www.cewesecure.se